Department of
Education

Student Name_____

OHIO GRADUATION TESTS

Mathematics

Practice Test
for
Ninth Graders

September 2004

Large Print

© 2004 by Ohio Department of Education

MATHEMATICS TEST

Directions: For multiple-choice items, choose the best answer then blacken the corresponding space on your Answer Document. If you change an answer, be sure to erase the first mark completely. When you respond to the short-answer and extended-response items, you do not have to use the entire area of the space provided. The use of the grid paper in your Answer Document is optional unless otherwise stated. Be sure that your answers are complete and all your work appears in the Answer Document.

---

1. The table below contains the results of a biology experiment.

Record of Blooms

Week	1	2	3	4	5
Number of Blooms	3	9	27	81	***b***

Assuming the pattern shown in the table continues, what is the value of ***b***?

A. 108

B. 130

C. 162

D. 243

2. The box-and-whisker plot below describes the weights of a sample of 100 chickens.

Distribution of Weights of Chickens (lb)

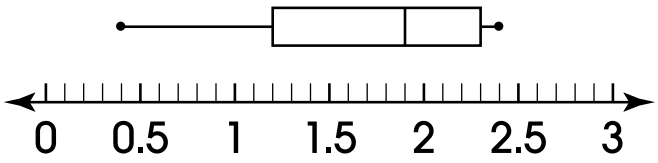

What statement can be made about the data, using the graph alone?

A. The range of the weights is 3 lb.

B. The median weight is less than 2 lb.

C. Twenty-five percent of the chickens weigh less than 1 lb.

D. Fifty percent of the chickens weigh more than 2 lb.

3. Which equation is equivalent to $3(2\boldsymbol{x} - 5) = 4(\boldsymbol{x} + 3)$?

A. $2\boldsymbol{x} = -27$

B. $2\boldsymbol{x} = 27$

C. $10\boldsymbol{x} = -27$

D. $10\boldsymbol{x} = -3$

4. Darius and his father are constructing a set of bunk beds as shown in the diagram below.

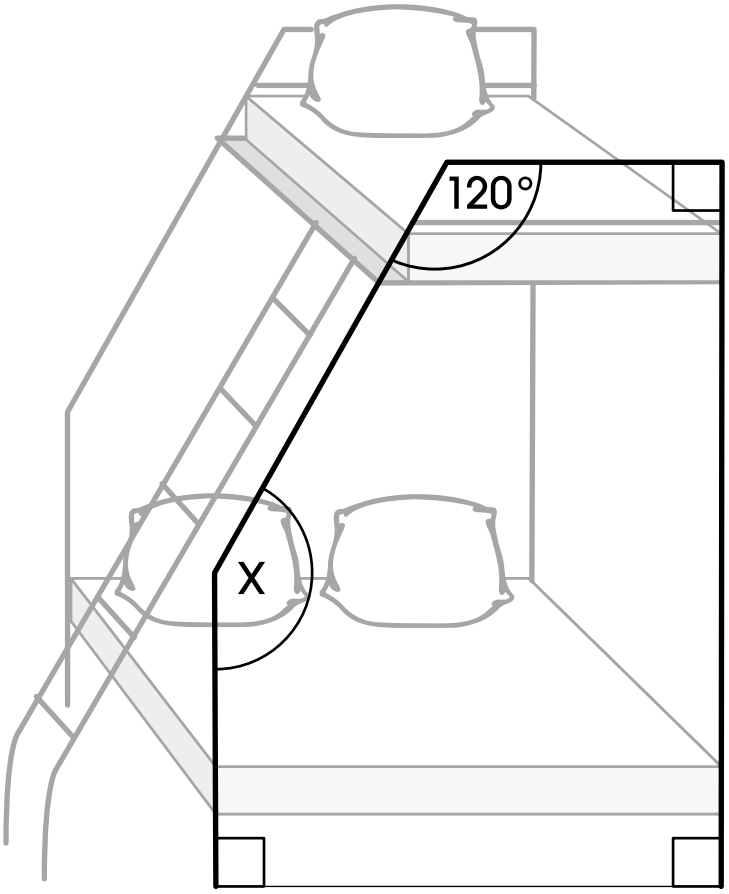

What is the measure of angle X?

A. 540°

B. 390°

C. 150°

D. 120°

5. Three different opinion polls show different results for the proportion of voters expected to vote for Candidate A in an election for mayor.

   Poll 1: Nine of every 20 voters are expected to vote for Candidate A.

   Poll 2: The percentage of voters expected to vote for Candidate A is 52%.

   Poll 3: There are 130,000 people expected to vote, and of these, 55,000 are expected to vote for Candidate A.

   In your **Answer Document**, determine which of these polls shows the greatest favorable result for Candidate A. Show your work or provide an explanation for your answer.

For question 5, respond completely in your **Answer Document**.
(2 points)

6. A set of data contains 10 negative numbers and 4 positive numbers. Which one of these statements must be true?

   A. The mean is a negative number.

   B. The median is a negative number.

   C. The mode is a negative number.

   D. The range is a negative number.

7. Travis went on a long trip. The graph below represents the relationship between distance and time.

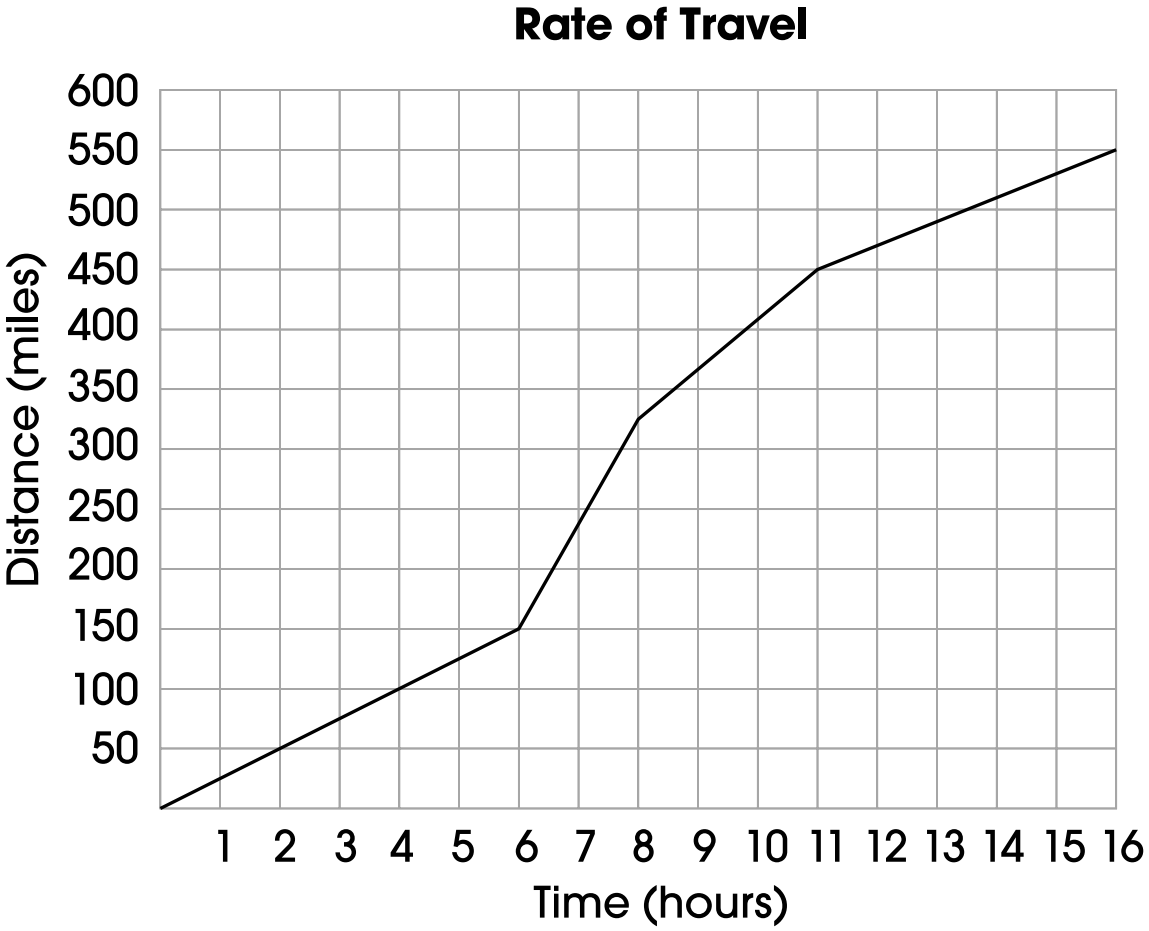

During what interval was Travis' average rate of travel the fastest?

A. 0 to 6

B. 6 to 8

C. 8 to 11

D. 11 to 16

8. Which expression represents 270,000 written in scientific notation?

A. 270×10^3

B. 27×10^4

C. 2.7×10^5

D. 0.27×10^6

9. The table below shows values for ***x*** and ***y***.

x	***y***
0	–1
1	0
2	3
3	8
4	15
5	24

Which of these equations represents the relationship between ***x*** and ***y***?

A. $y = x - 1$

B. $y = x + 19$

C. $y = x^2 - 1$

D. $y = 2x^2 - 5$

10. Triangle DEF has vertices with coordinates D(–2, 1), E(1, 5) and F(2, 3).

    In your **Answer Document**, draw and label triangle DEF on the grid provided.

    Draw the triangle D′E′F′ by translating each vertex of triangle DEF three units to the right and two units down. Appropriately label triangle D′E′F′.

    Draw the triangle D′′E′′F′′ by translating each vertex of triangle D′E′F′ two units to the left and seven units up. Appropriately label triangle D′′E′′F′′.

    Describe the movements necessary to perform a single translation of each vertex from triangle DEF to triangle D′′E′′F′′.

For question 10, respond completely in your **Answer Document**.
(4 points)

11. Which number is irrational?

    A. -2

    B. $\sqrt{8}$

    C. 3

    D. $\frac{22}{8}$

12. Julie does not want to spend more than $300 on ice skating. Her skates will cost $42, her lessons will cost a total of $56, and the practice time will cost $7.50 per hour.

    Which inequality should Julie use to determine the maximum number of hours, ***h***, she can practice without spending more than $300?

    A. $56 + 7.50\boldsymbol{h} < 300$

    B. $42 + 7.50\boldsymbol{h} < 300$

    C. $7.50\boldsymbol{h} - 42 - 56 \leq 300$

    D. $42 + 56 + 7.50\boldsymbol{h} \leq 300$

13. Daniel cut the corner off a cube as shown in the diagram below.

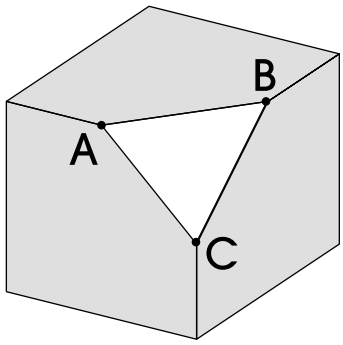

Points A, B and C are the midpoints of the edges of the cube. What type of three-dimensional figure has been cut off?

A. cone

B. cube

C. triangular prism

D. triangular pyramid

14. Pippi calculates her total earnings for the month with the equation

$$E = 15m + 5b,$$

where E is the total number of dollars she earns, m is the number of lawns she mows, and b is the number of hours she baby-sits.

If Pippi mows 6 lawns, how many hours must she baby-sit to earn a total of $200?

A. 20

B. 22

C. 40

D. 45

15. The population density of a state, in people per square mile, is found by dividing the population of the state by its area in square miles. Florida has an area of 53,936 square miles. In 1998, Florida had a population of 14,915,980 and a population density of 276.5 people per square mile.

    In your **Answer Document**, describe the conditions under which a different state could have a smaller population than Florida but have a greater population density.

For question 15, respond completely in your **Answer Document**.
(2 points)

16. George wants to conduct a survey to determine the types of music that the students want at a school dance.

    Which sample population should George survey to represent the entire student body?

    A. survey the teachers

    B. survey the captain from each sports team

    C. randomly survey two people from each homeroom class

    D. randomly survey 50 people from the freshman class

17. Gene has a cylinder with radius 4 inches and height 2 inches. He cut the cylinder in half along the length of the diameter, as shown in the diagram below.

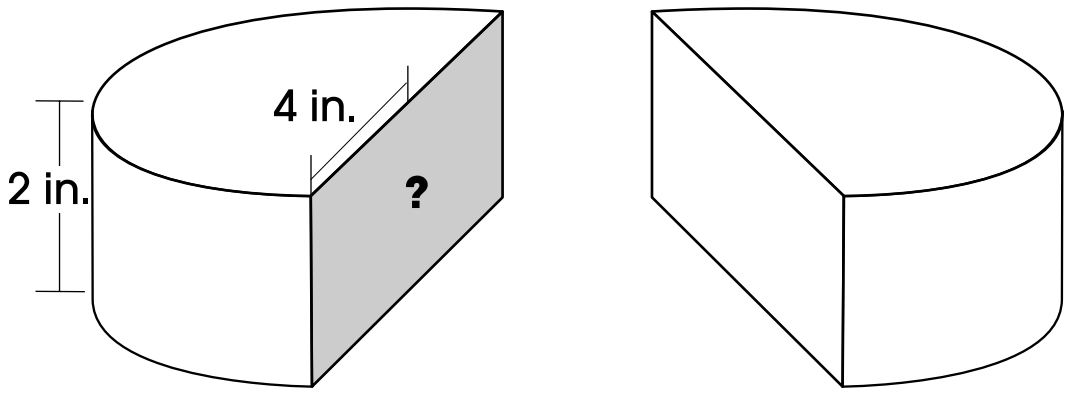

What is the area of the shaded cross-section?

A. 48π square inches

B. 24π square inches

C. 16 square inches

D. 8 square inches

18. A system of equations is shown below.

$$3\boldsymbol{x} + 2\boldsymbol{y} = 19$$
$$2\boldsymbol{x} - \boldsymbol{y} = 1$$

What is the solution to the system of equations?

A. $\boldsymbol{x} = 1$, $\boldsymbol{y} = 1$

B. $\boldsymbol{x} = 3$, $\boldsymbol{y} = 5$

C. $\boldsymbol{x} = 7$, $\boldsymbol{y} = -1$

D. $\boldsymbol{x} = 19$, $\boldsymbol{y} = 1$

19. Carlos and Tiesha empty a bag of 100 colored candies and count the number of each color, as shown in the following chart.

Number of Candies of Each Color

Color	Number
Orange	20
Red	10
Brown	30
Green	10
Yellow	15
Blue	15

They return all the candies to the bag and shake the bag. Carlos removes 5 candies, 2 of which are blue. Tiesha then pulls out one candy.

What is the probability that Tiesha pulls out a blue candy?

A. 6.67%

B. 13.68%

C. 15.00%

D. 15.79%

20. The floor plan of one room in a bookstore is a square with an area of 576 square feet. Part of this room is taken up by a café. The border of the café runs from the midpoints of two adjacent walls.

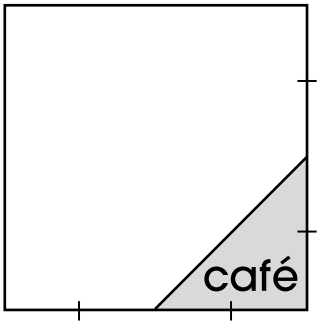

In your **Answer Document**, find the area, in square feet, of the café. Show your work or explain how you found your answer.

For question 20, respond completely in your **Answer Document**.
(2 points)

21. Which of these represents the graph of the equation $-3x + 4y = -12$?

A.

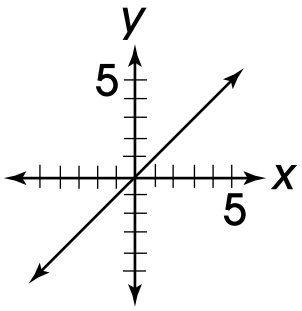

B.

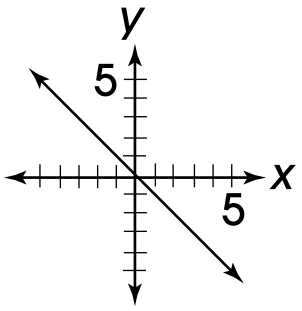

C.

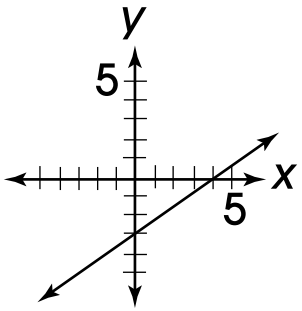

D.

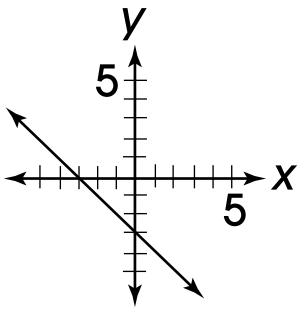

22. Alanis is moving and needs to pack two mirrors. The larger mirror fits in a box that is 18 inches wide by 20 inches long. Her smaller mirror is similar in proportion to the larger mirror. Alanis determines that the width of the smaller box needs to be a minimum of 9 inches.

    What should be the minimum length of the box to hold the smaller mirror?

    A. 2 inches

    B. 6 inches

    C. 9 inches

    D. 10 inches

23. The table shows the number of people who speak each of the six most common languages of the world.

Number of People (in millions)

Mandarin	English	Hindi	Spanish	Russian	Arabic
900	430	320	310	280	185

Which type of graph is appropriate to display the data in the table?

A. bar graph

B. box-and-whisker plot

C. line graph

D. scatterplot

24. Points P, Q and R are shown below.

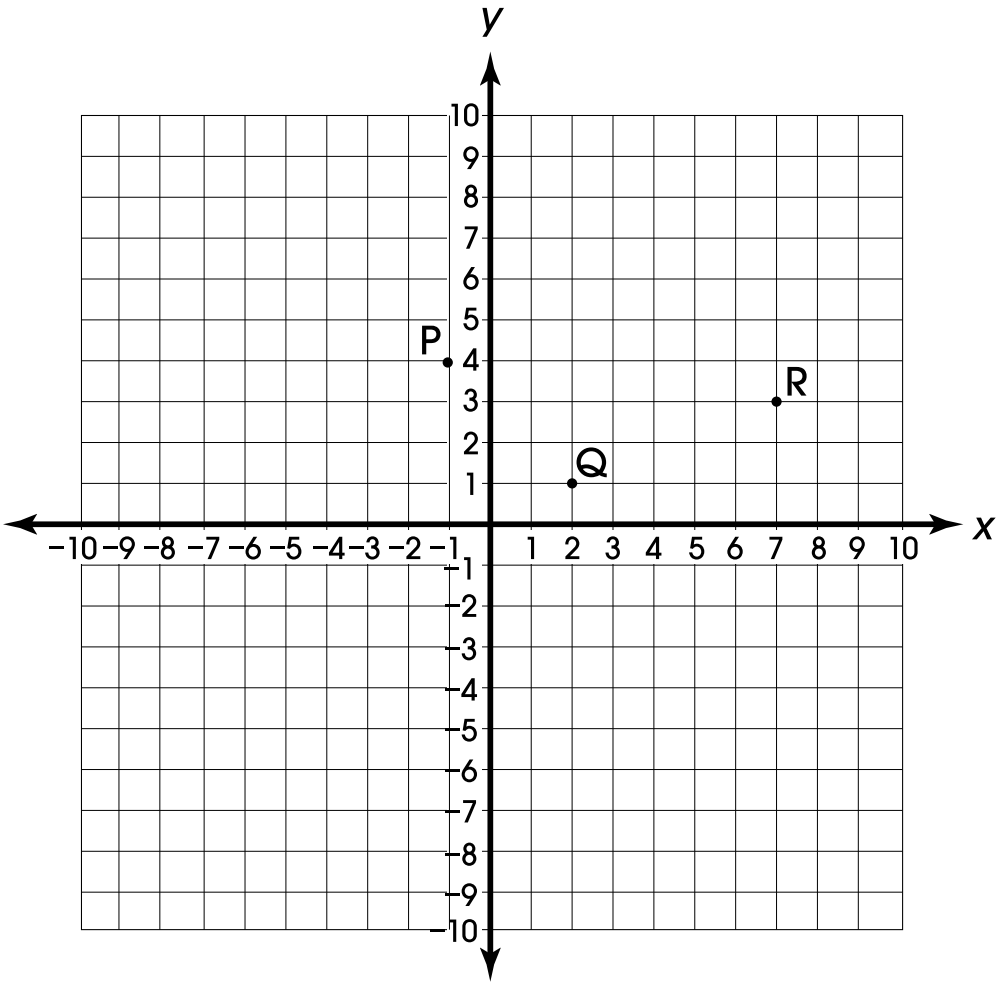

These points are three vertices of a parallelogram. What are the coordinates of the fourth vertex of parallelogram PQRS?

A. (4, 6)

B. (5, 2)

C. (8, –1)

D. (9, 1)

25. Aaron wants the mean of his 5 geometry test scores to be at least 90%. His scores on the first four tests are 85%, 83%, 96% and 91%. What is the minimum score Aaron can earn on the fifth test to meet his goal?

A. 89%

B. 90%

C. 95%

D. 100%

26. Cameron had $500 in savings on January 1. Quinn had $800 in savings on January 1. Cameron deposits $20 per week into his savings account. Quinn withdraws $15 per week from his savings account.

    In your **Answer Document**, write two equations: one for the amount of money in Cameron's savings ***x*** weeks after January 1st, and one for the amount of money in Quinn's savings ***x*** weeks after January 1st.

    Determine the number of weeks until Cameron will have more money in his savings account than Quinn. Show your work or provide an explanation for your answer.

For question 26, respond completely in your **Answer Document**.
(2 points)

27. Which figure is **not** a parallelogram?

A.

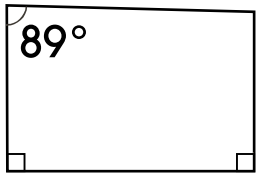

B.

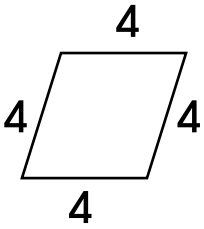

C.

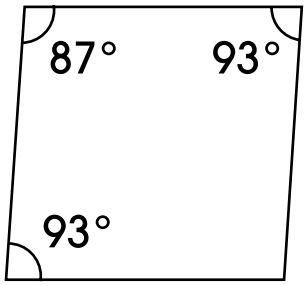

D.

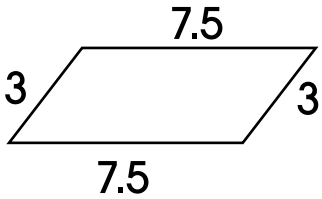

28. The graph shows the population of Ohio from 1900 to 1990.

Ohio Resident Population 1900 –1990

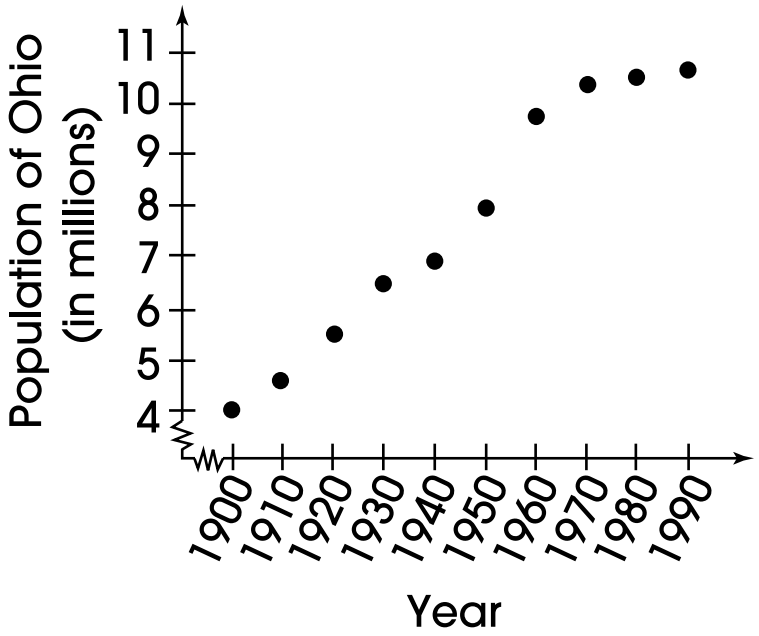

Based on the data, in which decade did the population of Ohio increase the most?

A. 1910 to 1920

B. 1940 to 1950

C. 1950 to 1960

D. 1960 to 1970

29. The table below shows the number of fish caught each day last week.

Number of Fish Caught Each Day

Day	Number of Fish Caught
Monday	4
Tuesday	0
Wednesday	3
Thursday	2
Friday	0
Saturday	0
Sunday	5

If one day of that week is chosen at random, what is the probability that a minimum of one fish was caught that day?

A. $\frac{3}{7}$

B. $\frac{1}{2}$

C. $\frac{4}{7}$

D. $\frac{2}{1}$

30. A student shines a light through a cutout of a triangle held parallel to a wall several feet straight in front of him, producing a similar image on the wall.

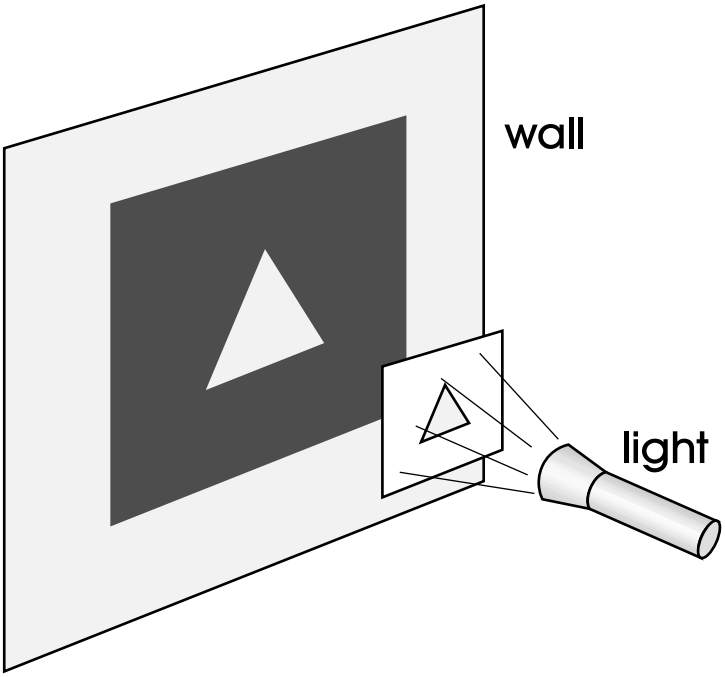

What must the two triangles have in common?

A. equal areas

B. equal heights

C. corresponding sides that are congruent

D. corresponding angles that are congruent

31. A circular pool has a diameter of 12 feet.

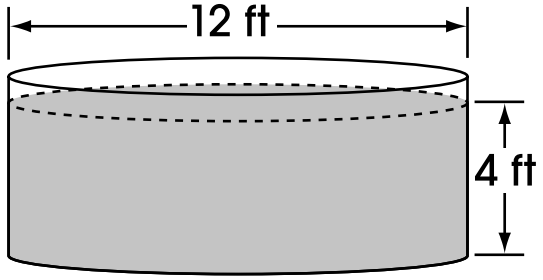

About how much water is needed to fill the pool to a depth of 4 feet?

A. 75 cubic feet

B. 150 cubic feet

C. 450 cubic feet

D. 1,800 cubic feet

32. Maria is making a quilt. She has a large piece of fabric that is 0.02 millimeters thick. The fabric is cut in half and one piece is placed on top of the other to make a pile. The pile is cut in half, and then one half is placed on top of the other to make a higher pile.

Continuing this process, what would the thickness of the pile be after the 4th cut and piling?

A. 0.0016 millimeters

B. 0.08 millimeters

C. 0.32 millimeters

D. 16 millimeters

33. A town is conducting a survey to determine if the residents would use a new recreation facility. The survey must represent all different types of people who live within the town. Three different survey locations were proposed: a golf course, a day care center and a shopping mall. Every fifth person at the location would be asked to take part in the survey.

    In your **Answer Document**, determine which of the three proposed survey locations would provide the least amount of bias. Show your work or provide an explanation for your answer.

For question 33, respond completely in your **Answer Document**.
(2 points)

34. A right triangle has the dimensions as shown in the diagram below.

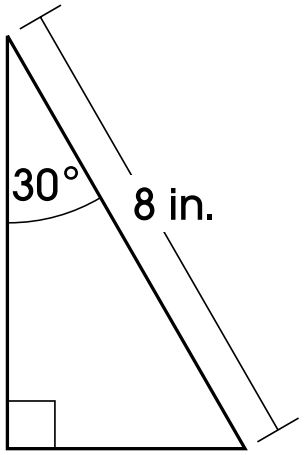

What is the approximate area of the triangle?

A. 8.0 square inches

B. 11.3 square inches

C. 13.9 square inches

D. 16.0 square inches

35. Which expression is **not** equivalent to 7?

A. $|-7|$

B. $\sqrt{49}$

C. 7^1

D. $\frac{7}{49}$

36. A DVD player is on sale for 15% off the regular price of $135. After the price reduction, a 5% sales tax is added.

How much will a customer pay?

A. $141.75

B. $120.49

C. $114.75

D. $109.01

37. Rene is selecting a menu for a party. He plans to select a meal that includes one main dish, one vegetable and one dessert from the following list of choices.

Party Menu		
Main Dish	**Vegetables**	**Desserts**
stuffed chicken breast	Italian green beans	peach cobbler
grilled salmon	corn on the cob	German chocolate cake
beef tips	glazed carrots	banana pudding
	baked potato	ice cream with cookies
		strawberry shortcake

How many different meals can Rene select?

A. 12

B. 32

C. 35

D. 60

38. Identical boxes are to be stacked along the back wall of a storage room from floor to ceiling. The diagram shows the dimensions of the back wall and the dimensions of one of the boxes, which has a square base.

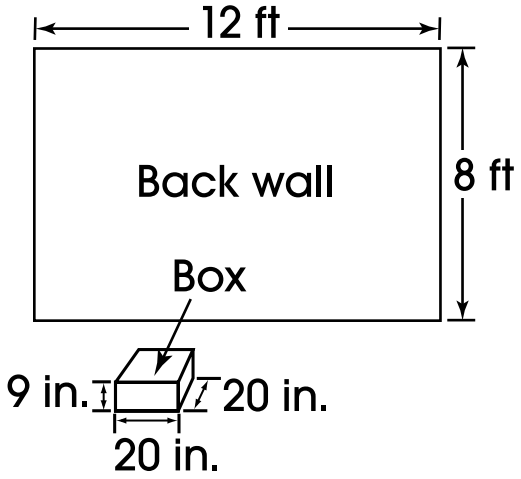

Which of these is the best estimate of the maximum number of boxes that can be stacked against the entire back wall?

A. 200

B. 70

C. 50

D. 15

M